KINNEY®

EX4000 ATEX Series Vacuum Boosters

EX4000 EX ATEX Series heavy duty industrial vacuum boosters are used to "supercharge" vacuum pumps including piston, liquid ring, dry vacuum, and vane pumps to greatly extend performance. This allows significantly higher pumping speeds, reducing pumping time, and improving the achievement of lower vacuum pressures. The vacuum booster must be used in conjunction with a primary vacuum pump with discharge to atmospheric pressure.***

Features

Vertical Flow Double Envelope Gas Service
Built to laboratory standards where virtually complete sealing is required. The drive shaft is mechanically sealed and the oil sumps are plugged to provide an even higher degree of leakage protection.

Cooling Coils
All EX4000 ATEX models come standard with copper cooling coils to provide cooling of lubricating oil for high performance applications. Stainless steel cooling coils are an available option for all units.

Stainless Steel External Tubing
All units come standard with stainless steel external tubing for the cooling coil crossover.

Instrumentation Ports
All units are drilled in multiple locations to allow the installation of temperature and vibration monitoring equipment for installations.

Low Mechanical Noise
Every EX4000 ATEX series vacuum booster is designed to operate at 82 dB(A) or less at blank-off (open field; motor and background noise excluded).

Optional Motor Mounting Flanges for Vacuum Boosters
All metric booster models are available with flange adapters for mounting an IEC B5 or C-flange motor directly to the vacuum booster. NEMA connections are available for nonmetric versions.

Metric Drive Shaft and Ports Standard
All EX4000 Series units come standard with metric drive shaft and process connections.

Applications

This series has wide applications as a vacuum booster to improve backing pump performance, even for operations with harsh requirements. Applications include process gas handling, petrochemical and chemical processing, vacuum coating, heat treating, heat transfer, degassing, polymer processing, vacuum distillation, general process vacuum,and many other applications.

*** MD-Kinney's VBXpert Portal Conditions of Service print out is required with each PO submission.

External Classification:
Zone: 1 or 2 | Gas Group: IIA, IIB, or IIB+H2
Temp Class: T3, T2, or T1

Internal Classification:
Internal classification - Available for systems with P1 (inlet pressure) less than 100 mbar and temp classes T3 to T1. Gas group must be verified at time of quotation.

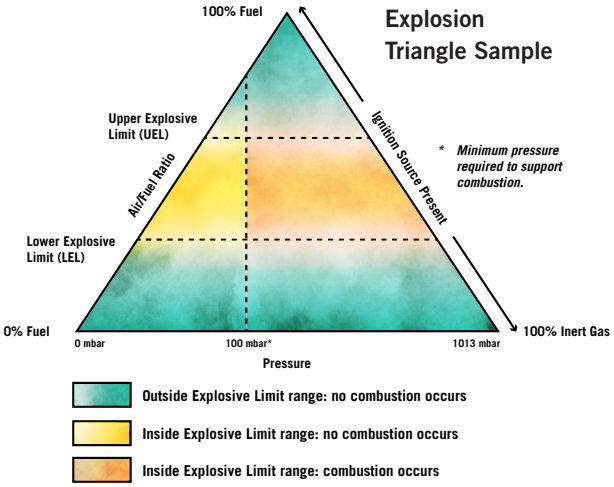

The blower or booster is intended to internally handle explosive gas mixtures up to the critical gas combustion pressure of approximately 100 mbar. This pressure varies by gas type. All product selections are required to be evaluated through MD-Kinney's VBXpert Portal sizing software prior to quotation. For pressures greater than 100 mbar ATEX Internal classification is not supported.

Materials Available:
Cast Iron - All models
Ductile Iron - All models
Note: Ductile Iron is required for Hydrogen Applications
Stainless Steel - EX4009 only

Additional Options:
- SST Vent To Drain
- Material Certification
- Stainless Steel Cooling Coils

All blowers are factory tested to meet ISO and ATEX quality standards.

KINNEY • 4840 W. KEARNEY ST., SPRINGFIELD, MO 65803 USA
P: 417-865-8715 OR 1-800-825-6937 • F: 417-865-2950
WWW.KINNEYVACUUM.COM

ATEX Vacuum Booster Dimensions

Model	Series	A	B	C	D	Shaft Diameter	E	F	G	Net Weight*
		mm (in)	mm (in)	mm (in)	mm (in)	mm (in)	mm (in)	mm (in)	mm (in)	kg (lbs)
EX4009	Standard Shaft	705 (27.76)	419 (16.51)	286 (11.25)	292 (11.50)	28 (1.125)	100DN (4)	191 (7.50)	394 (15.50)	91 (200)
EX4012	Standard Shaft	781 (30.76)	457 (18.01)	324 (12.75)	368 (14.50)	28 (1.125)	100DN (4)	191 (7.50)	394 (15.50)	182 (225)
EX4009	C-Flange	743 (29.24)	346 (13.63)	286 (11.25)	292 (11.50)	25 (1.00)	100DN (4)	191 (7.50)	394 (15.50)	118 (260)
EX4012	C-Flange	819 (32.24)	384 (15.13)	324 (12.75)	368 (14.50)	25 (1.00)	100DN (4)	191 (7.50)	394 (15.50)	136 (300)

*Approximate shipping weight.
Dimension values are approximate and should not be used for construction.
Certified prints are available through your local Kinney Sales Professional.

Standard Shaft

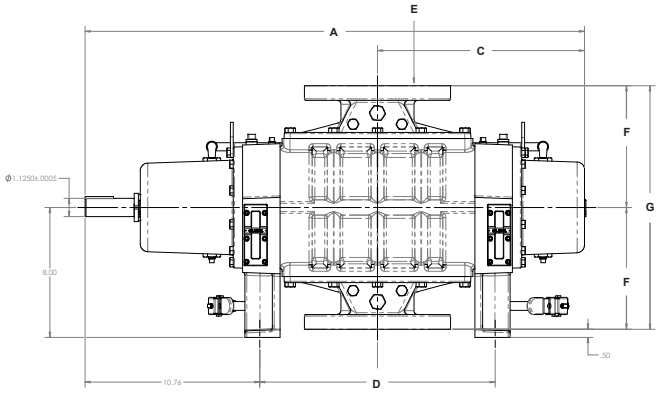

C-Flange

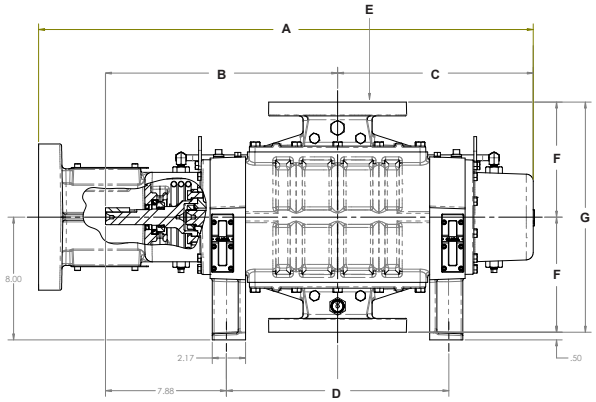

Performance Tables

The data shown provides a sampling of the product performance capability. Our application software **VBXpert Portal** (available at www.md-kinney.com) is required for all ATEX EX configurations. Create your own or request a VBXpert Portal quotation for your specific application.

	Nominal Displacement				Max Pressure Differential Across Booster**				Motor Power			
	50 Hz		60 Hz		50 Hz		60 Hz		50 Hz		60 Hz	
	m3/hr	cfm	m3/hr	cfm	mbar	Torr	mbar	Torr	kW	HP	kW	HP
EX4009	761	448	917	540	0-197	0-148	0-200	0-150	5.7	7.7	6.9	9.3
EX4012	1015	598	1223	720	0-197	0-148	0-200	0-150	7.1	9.5	8.7	11.6

In conjunction with our program of continuous testing and design upgrading, all specifications are subject to change without notice. Values are approximate and should not be used for construction.
Certified prints are available through your local Kinney Sales Professional.
*Approximate shipping weight.
** For air at 20°C (68°F) inlet temperature. Use VBXpert Portal sizing software for other conditions.

Material Specifications:

Housing:	Cast iron
End Plates:	Cast iron
End Covers:	Gear end - Cast iron Free end - Cast iron
Rotors:	Ductile iron
Shafts:	Ductile iron cast integrally with rotor
Bearings:	Gear (drive) end - Double row ball Free (back) end - Cylindrical roller Drive shaft - Spherical roller
Drive Shaft:	SAE 4140 forged alloy steel
Gears:	Alloy steel, helical cut
Seals:	Double Envelope Gas Service - Mechanical and labyrinth type on rotor shafts plus mechanical sealing on the drive shaft. Oil Sumps are sealed
Lubrication:	Oil splash system, each cover holds .35L of MD PLUS Oil.

All EX units undergo 10.34 bar hydrostatic validation and standard performance testing before shipment.

CONTACT US

For more information, contact your Regional Sales Manager or call us at:

1-800-825-6937

Your Local Sales Professional:

PNEU-VAC AIR, LLC
7637 Commerce Street, Corcoran MN 55340
customerservice@pneuvacair.com
763-762-4080
pneuvacair.com