M-D Pneumatics®

MPAK Blower Packages

MPAK is value-engineered to meet specific applications and designed for simple installation. Open and enclosed blower package configurations provide flow from 250 to 1985 CFM, pressure from 5 to 15 PSI, and vacuum from 12" to 17" Hg. MPAK packages are sized with air blowers and backed by M-D Pneumatics' premium customer service.

Engineered with options. Get maximum performance, extreme reliability and cost efficiencies by sizing M-D Pneumatics™ air blowers to your application: CP Series, PD Plus, or Qx.

Cost effective. Each MPAK is accurately sized to your application specifications. The most flexible, hassle-free design.

Maintenance friendly design. Both open and enclosed packages allow easy access to components. Enclosed design features clear-view window to keep a close check on blower oil levels.

Easy to operate. Standard gauges measure pressure, temperature, and inlet vacuum.

Ready to go. MPAK packages are factory assembled and require minimal training at start up.

Easy to move. Mounting base includes integral fork truck pockets for easy transportation and positioning.

Retrofittable. Field retrofittable enclosure option available.

Additional Features

- TEFC motor standard with 1.15 service factor
- Welded steel motor slide base
- Matched V-belt drive with 1.1 service factor
- OSHA belt guard with flow-through ventilation keeps belts running cool
- Low pressure drop inlet filter or silencer
- Suitable for indoor or outdoor installation
- Shipped completely assembled for convenient installation*
- Enclosure is field mountable

* Height consideration may require partial disassembly for shipment

Typical Applications:

MPAK blower packages are used by customers in markets such as Chemical, Food & Beverage, Power & Energy, and Construction. This model is engineered to handle demanding applications like pneumatic conveying and wastewater aeration.

MPAK 500 with sound attenuating blower package

MPAK 500 open blower package

M-D PNEUMATICS • 4840 W. KEARNEY ST., SPRINGFIELD, MO 65803 USA
P: 417-865-8715 OR 1-800-825-6937 • F: 417-865-2950
WWW.MDPNEUMATICS.COM

Design Features

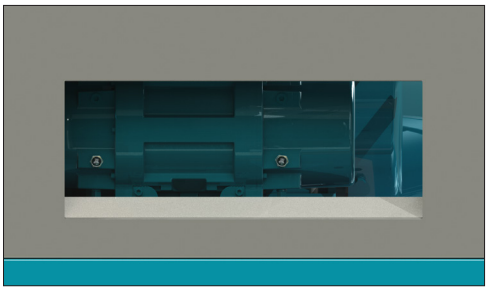

- Easily check oil levels on blower with clear view window.

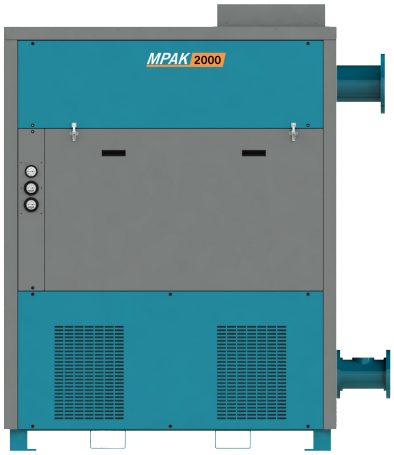

- Gauges are mounted in line with access panel to keep a close check on performance.
- Removable access panel opens to reveal blower, motor and components.
- Inlet and discharge ANSI flanges, top cooling air / discharge exhaust fan, and cooling air inlets located on both sides.

Performance Specs

Model	Lower CFM	Lower m³/H	Upper CFM at min. pressure	Upper m³/H at min. pressure	Max pressure PSIG	Max pressure barg	inHg/mbar
MPAK 500 (All units have 4" inlet and discharge flanges)							
CP4005-A6L2CV1-A	250	425	375	638	10	0.69	12 inHg | 406.37 mbar
CP4007-A6L2CV1-A			495	842	15*	1.03	12 inHg | 406.37 mbar
CP5006-A6L2CV1-A			530	901	15*	1.03	12 inHg | 406.37 mbar
PD+4009-A3L2CV2-A			418	711	15	1.03	17 inHg | 575.69 mbar
PD+4012-A3L2CV2-A			570	969	15	1.03	17 inHg | 575.69 mbar
QX3208-A4L3CV2-A			440	714	15*	1.03	17 inHg | 575.69 mbar
MPAK 1000 (All units have 6" inlet and discharge flanges)							
CP 5009-A6L2CV1-A	500	850	800	1360	14	0.97	12 inHg | 406.37 mbar
CP 6008-A6L2CV1-A			805	1369	15*	1.03	12 inHg | 406.37 mbar
PD+ 5507-A3L2CV2-A			708	1204	15	1.03	17 inHg | 575.69 mbar
PD+ 5511-A3L2CV2-A			955	1624	15	1.03	17 inHg | 575.69 mbar
QX 4610-A4L3CV2-A			888	1510	15*	1.03	17 inHg | 575.69 mbar
QX 6009-A4L3CV2-A			975	1658	15*	1.03	17 inHg | 575.69 mbar
MPAK 2000 (All units have 8" inlet and 6" discharge flanges)							
CP6015-A6L2CV2-A	1000	1700	1505	2559	7	0.48	12 inHg | 406.37 mbar
CP7011-A6L2CV2-A			1350	2295	10	0.69	12 inHg | 406.37 mbar
CP7018-A6L2CV2-A			1800	3060	6	0.41	12 inHg | 406.37 mbar
PD7010-A3L2CV2-A			1565	2661	15*	1.03	17 inHg | 575.69 mbar
PD7013-A3L2CV2-A			1985	3375	15*	1.03	17 inHg | 575.69 mbar
QX6015-A4L3CV2-A			1720	2924	15*	1.03	17 inHg | 575.69 mbar

*MPAK limited to 15 psig to stay under ASME code requirements.

CP Series Blower

The CP Series blower is engineered for the highest pressure capability in its class and 20% longer life than other comparable blowers. With more standard features like triple lip seals, single piece shaft, helical gears for quieter operation, sight glass and magnetic drain plugs, the CP Series offers the best value in its class.

PD Plus Blower

PD Plus is the unequivocal blower of choice for gas applications. Its versatility makes it ideal for the broadest range of applications, even in the most severe operating conditions. The wide PD Plus product offering allows for multiple configurations and is customizable to meet application needs. With optimized seal pressure ratings, it is the most robust blower on the market.

Qx Blower

Qx blowers are high performance, energy efficient blowers that reduce noise while providing long operating life at maximum operating conditions.

M-D PNEUMATICS • 4840 W. KEARNEY ST., SPRINGFIELD, MO 65803 USA
P: 417-865-8715 OR 1-800-825-6937 • F: 417-865-2950
WWW.MDPNEUMATICS.COM

MPAK 500 Dimensions (shown in inches & millimeters)

Enclosed Package Views

Dimensions represent a pressure enclosed package built with a Qx blower 3208. A M-D Pneumatics representative can provide drawings for blower package combinations specific to an application.

Inlet silencer option shown

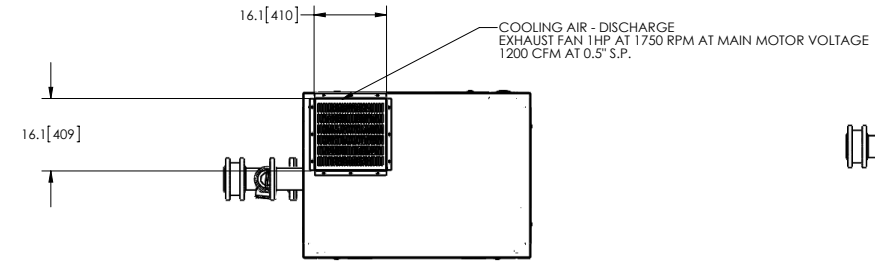

Bottom View

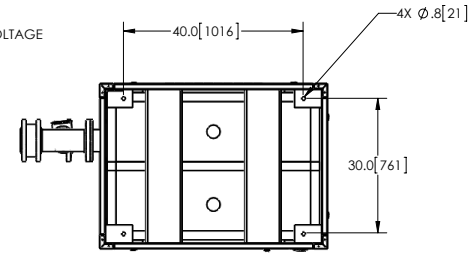

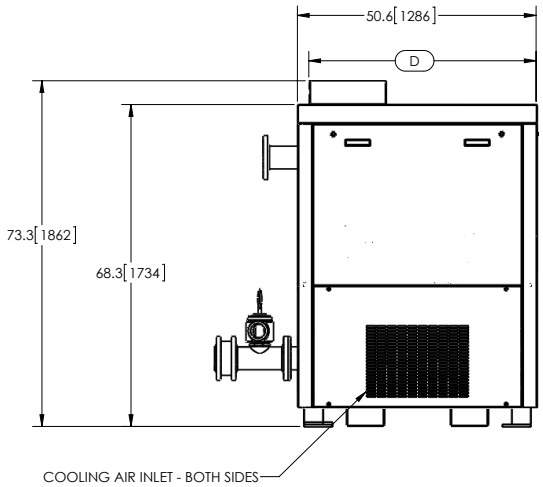

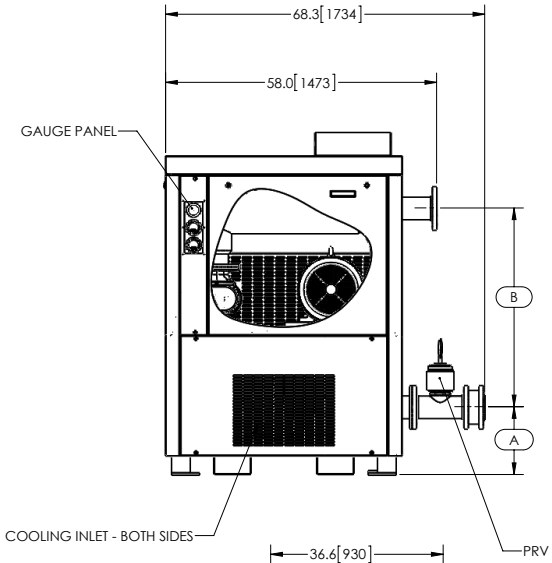

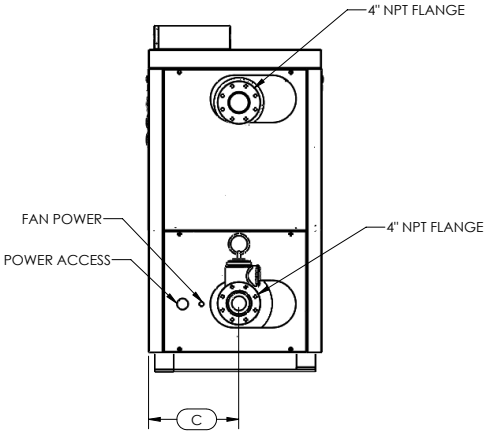

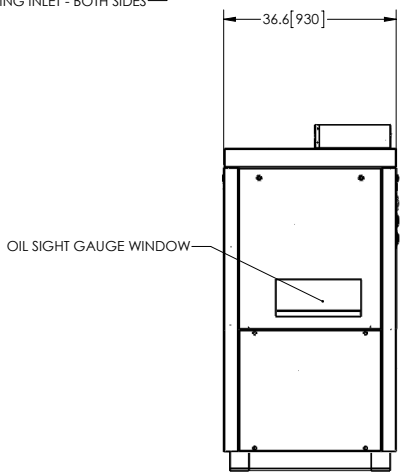

BLOWER MODEL	A	B	C	D
PD4009	14.2[361]	45.0[1143]	17.7[448]	48.2[1224]
PD4012	14.2[361]	45.0[1142]	16.1[410]	18.7[475]
CP4005	14.2[362]	43.4[1103]	24.0[609]	48.2[1224]
CP4007	14.4[366]	43.2[1098]	23.0[583]	48.2[1224]
CP5006	14.9[378]	43.2[1098]	23.2[588]	48.2[1224]
QX3208	14.5[368]	42.5[1081]	19.1[485]	48.2[1224]

MPAK 500 Dimensions (shown in inches & millimeters)

Inlet silencer option, Qx 3208 model shown

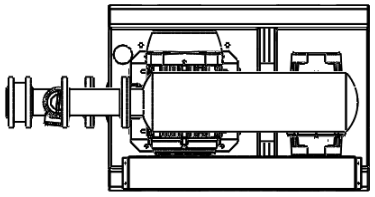

Open Package Views

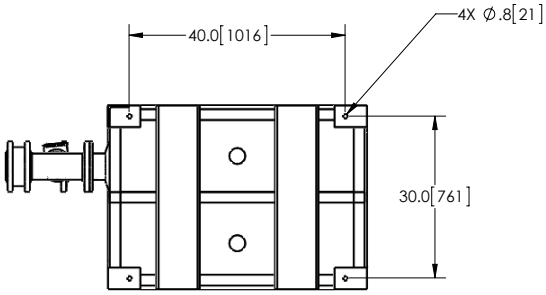

Bottom View

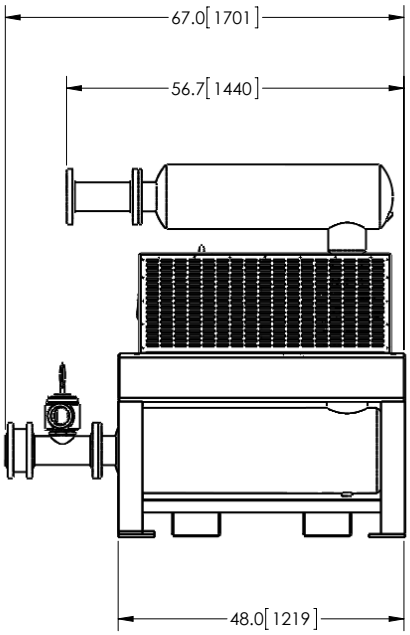

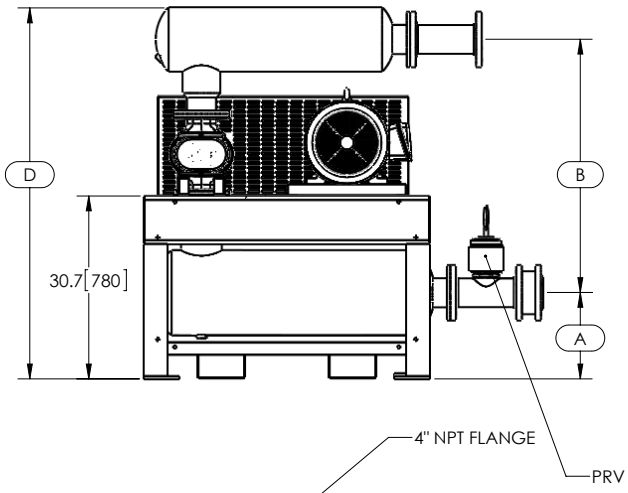

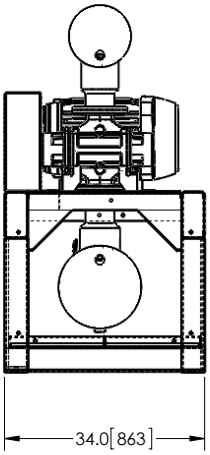

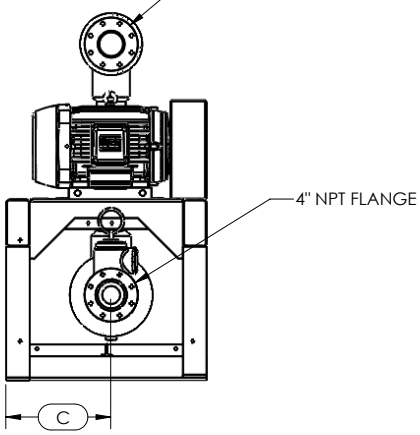

BLOWER MODEL	A	B	C	D
PD4009	14.2[361]	45.0[1143]	16.3[415]	64.5[1638]
PD4012	14.2[361]	45.0[1143]	14.8[377]	64.5[1637]
CP4005	14.2[362]	43.4[1103]	22.7[575]	62.9[1598]
CP4007	14.4[366]	43.2[1098]	21.6[550]	62.8[1595]
CP5006	14.9[378]	43.2[1098]	21.8[555]	63.4[1609]
QX3208	14.5[368]	42.5[1081]	17.8[452]	62.3[1582]

M-D PNEUMATICS • 4840 W. KEARNEY ST., SPRINGFIELD, MO 65803 USA
P: 417-865-8715 OR 1-800-825-6937 • F: 417-865-2950
WWW.MDPNEUMATICS.COM

MPAK 1000 Dimensions (shown in inches & millimeters) Enclosed Package Views

Dimensions represent a pressure enclosed package built with a PD Plus blower 5511. A M-D Pneumatics representative can provide drawings for blower package combinations specific to an application.

Inlet silencer option shown

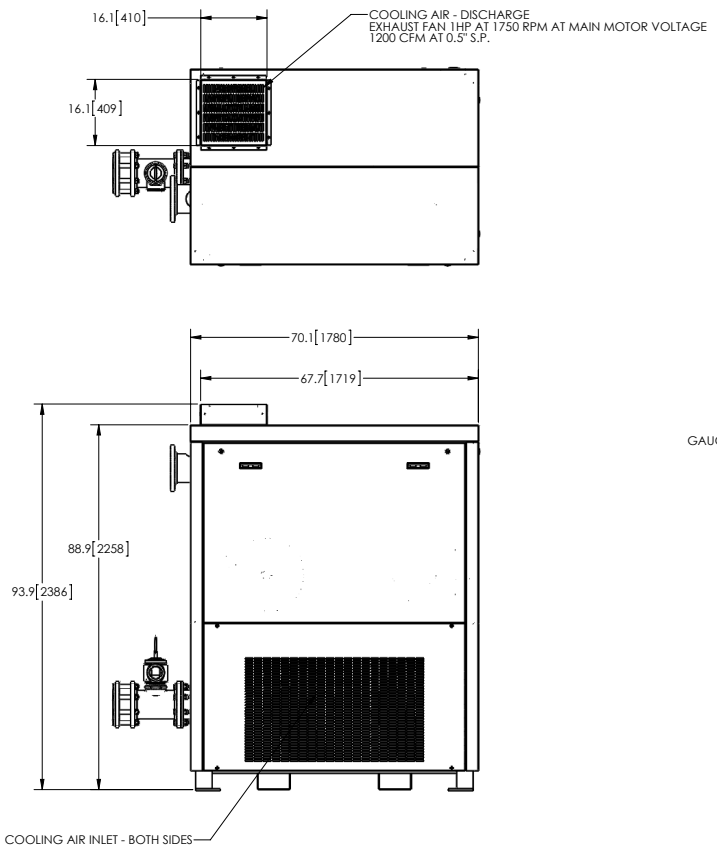

Bottom View

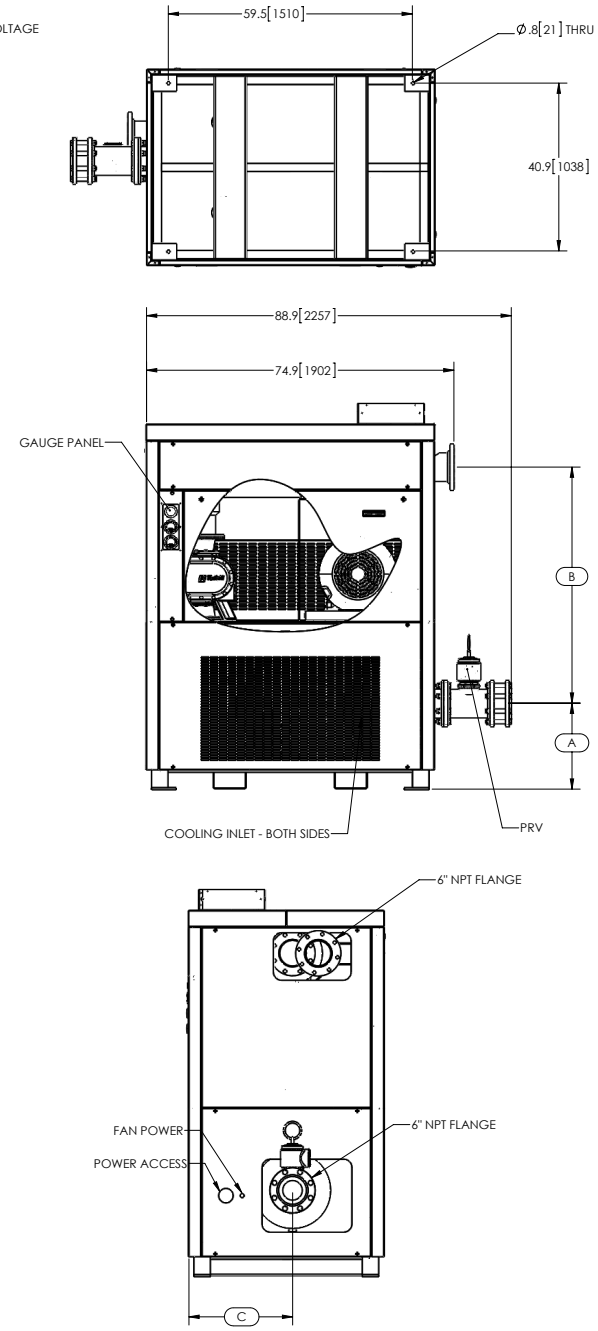

BLOWER MODEL	A	B	C
PD5507	20.9[532]	57.5[1460]	27.0[686]
PD5511	20.9[532]	57.6[1462]	25.3[642]
CP5009	17.9[454]	60.6[1538]	32.2[819]
CP6008	17.5[444]	61.0[1549]	31.5[801]
QX4610	23.4[595]	55.0[1397]	26.5[674]
QX6009	19.6[498]	58.8[1494]	25.3[643]

MPAK 1000 Dimensions (shown in inches & millimeters) Open Package Views

Inlet silencer option, PD 5511 model shown

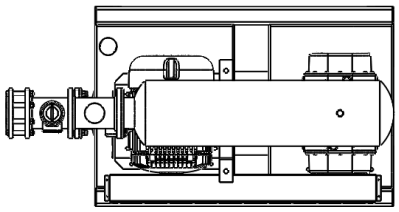

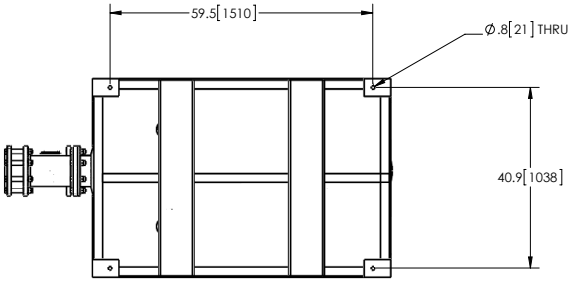

Bottom View

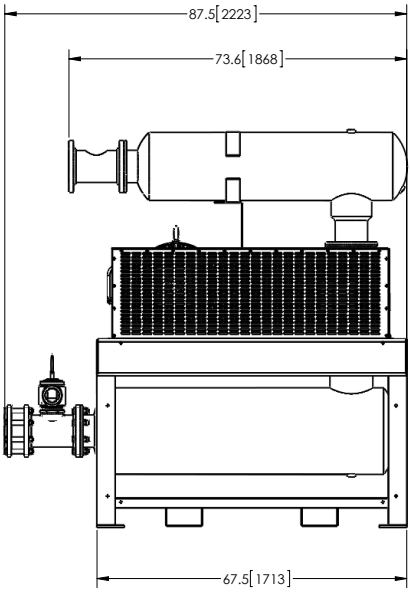

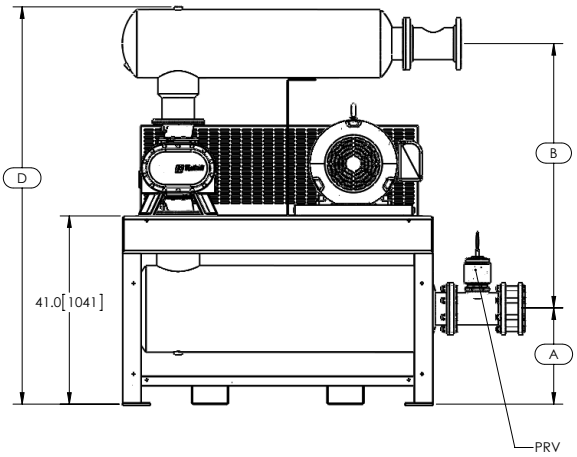

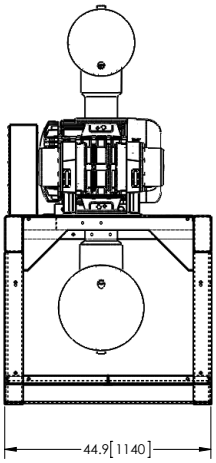

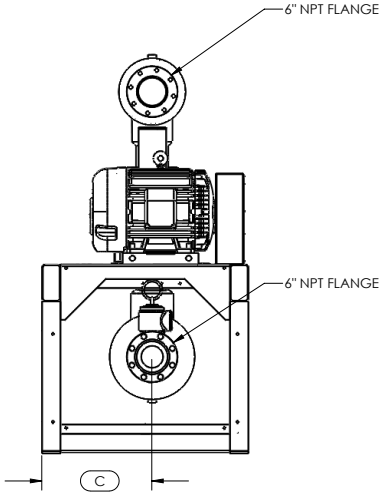

BLOWER MODEL	A	B	C	D
PD5507	20.9[532]	57.5[1460]	25.7[653]	86.4[2195]
PD5511	20.9[532]	57.6[1462]	23.9[608]	86.4[2195]
CP5009	17.9[454]	60.6[1538]	30.9[785]	86.4[2195]
CP6008	17.5[444]	61.0[1549]	30.2[767]	86.5[2196]
QX4610	23.4[595]	55.0[1397]	25.2[640]	86.4[2195]
QX6009	19.6[498]	58.8[1494]	24.0[610]	86.4[2195]

M-D PNEUMATICS • 4840 W. KEARNEY ST., SPRINGFIELD, MO 65803 USA
P: 417-865-8715 OR 1-800-825-6937 • F: 417-865-2950
WWW.MDPNEUMATICS.COM

MPAK 2000 Dimensions (shown in inches & millimeters)

Enclosed Package Views

Dimensions represent a pressure enclosed package built with a CP Series blower 6015. A M-D Pneumatics representative can provide drawings for blower package combinations specific to an application.

Inlet silencer option shown

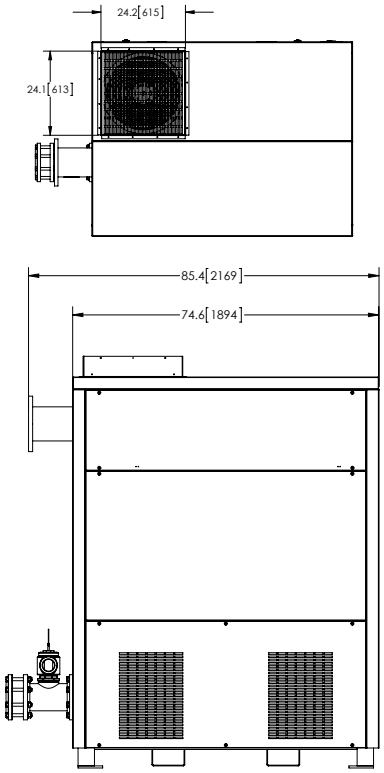

Bottom View

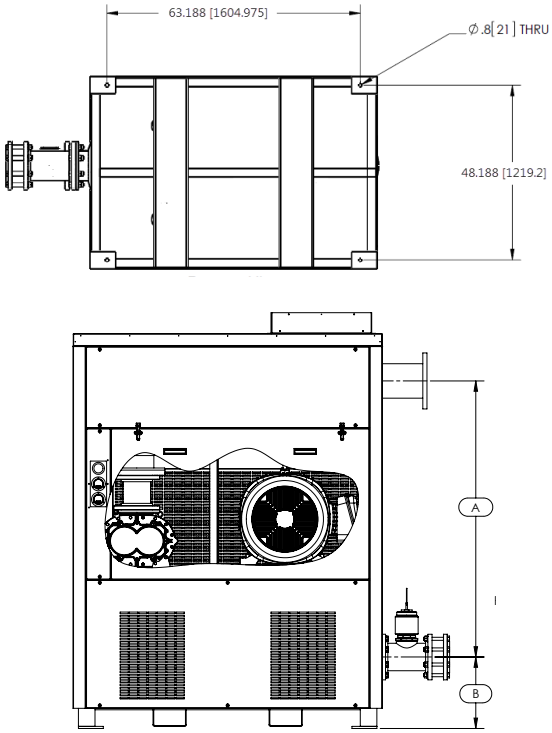

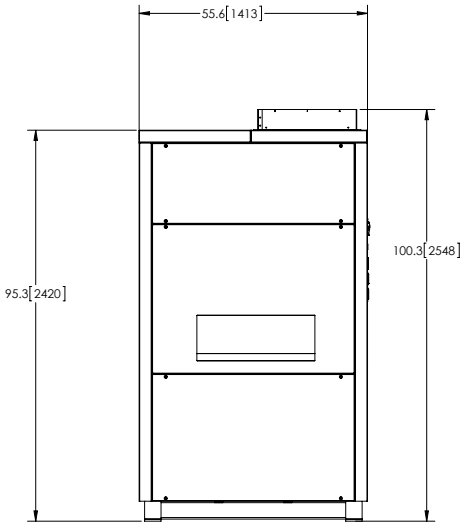

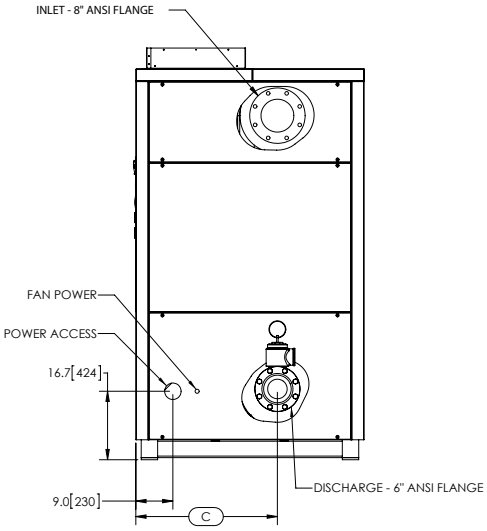

BLOWER MODEL	A	B	C
CP6015	66.6[1692]	17.2[438]	34.5[877]
CP7011	65.4[1662]	18.5[470]	36.4[926]
CP7018	66.7[1694]	17.2[438]	32.9[837]
QX6015	67.4[1712]	15.1[384]	31.6[802]
PD7010	67.6[1718]	17.2[438]	26.6[675]
PD7013	67.3[1708]	16.4[416]	25.2[640]

MPAK 2000 Dimensions (shown in inches & millimeters)

Inlet silencer option, CP Series 6015 model shown

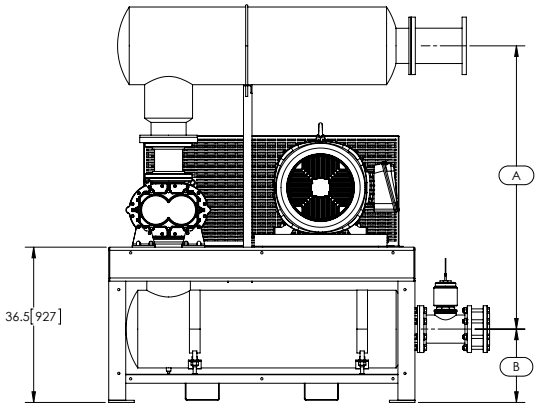

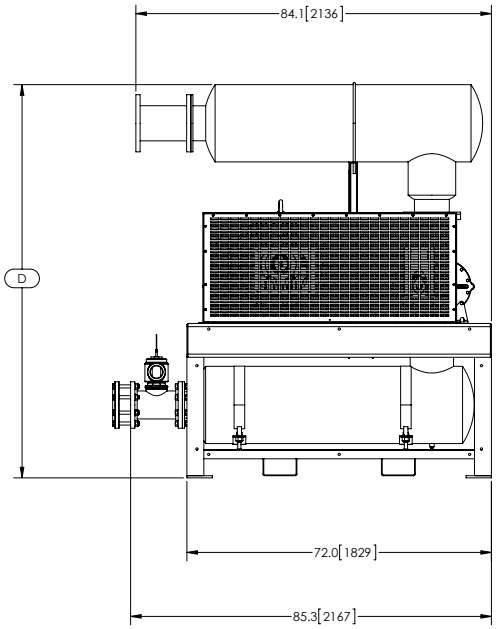

Open Package Views

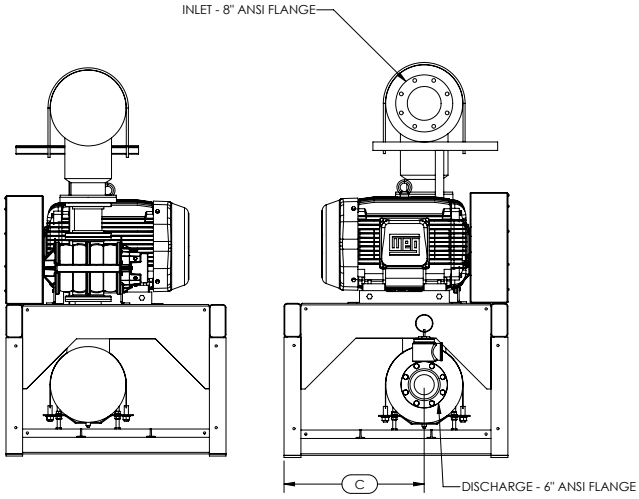

Bottom View

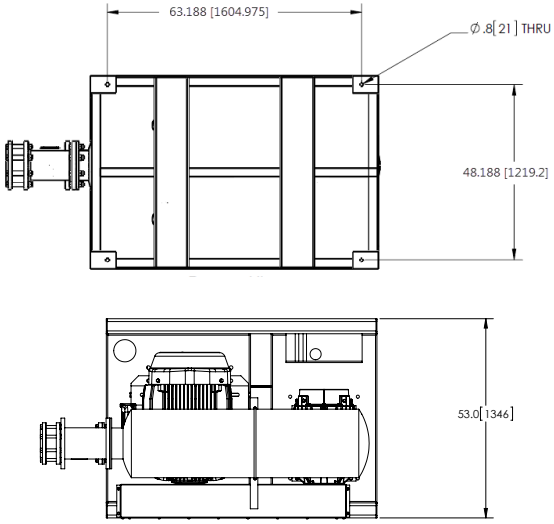

BLOWER MODEL	A	B	C	D
CP6015	66.6[1692]	17.2[438]	33.2[843]	93.0[2361]
CP7011	65.4[1662]	18.5[470]	35.1[892]	93.0[2361]
CP7018	66.7[1694]	17.2[438]	31.6[803]	93.1[2364]
QX6015	67.4[1712]	15.1[384]	30.3[769]	91.6[2327]
PD7010	67.3[1708]	17.6[448]	25.3[641]	94.0[2388]
PD7013	67.3[1708]	16.4[416]	23.9[606]	92.8[2356]

CONTACT US

For more information, contact your Regional Sales Manager or call us at:

1-800-825-6937

Your Local Sales Professional:

PNEU-VAC AIR, LLC
7637 Commerce Street, Corcoran MN 55340
customerservice@pneuvacair.com
763-762-4080
pneuvacair.com