PneuPak

Based on the dependable CP Series rotary positive blowers, PneuPak rotary blower packages are a dependable and economical low pressure (up to 15 PSIG or 16" Hg vacuum) air source for many industrial and municipal applications such as pneumatic conveying of bulk powder or seed, fluidization/agitation of bulk powders, wastewater aeration, milking of dairy cattle and motive force for vacuum exhausting and cleaning systems. In addition to dependability and economy, PneuPak rotary blower packages offer many distinct advantages:

Maintenance Friendly
Designed for easy access to vital areas for maintenance, PneuPak provides easy access to grease fittings and the oil reservoir.

Factory Built and Factory Warranted
PneuPak compact rotary blower packages are built in the M-D Pneumatics Springfield manufacturing facility under our ISO 9001 registered quality assurance system to assure you that your PneuPak is of the highest quality.
All PneuPak rotary blower packages are covered by a factory warranty of 18 months after installation, not to exceed 24 months after shipment.

Mounting Base with Integral Silencer
PneuPak utilizes an integrated silencer/base to provide a wide variety of blower-motor combinations.

Multiple Configurations
Whatever your air handling needs, there is a PneuPak available for your application. Automated configuration optimizes your PneuPak to afford you the best value for your investment.

Accessory Kits
Available for your PneuPak, accessory kits provide you the ability to customize your PneuPak for your particular needs. Available accessory kits include:
- Pressure or vacuum relief valve kit with fittings required for installation
- Instrumentation kit including inlet filter restriction indicator and 0-15 PSIG discharge pressure gauge
- NEMA 4/12 control panel for wall mounting including:
  - Powder coated and gasketed steel enclosure
  - Circuit breaker disconnect with through-the-door operator
  - Control circuit transformer with fused windings
  - Magnetic motor starter with overloads and manual reset
  - Run light
  - On-Off-Auto selector switch

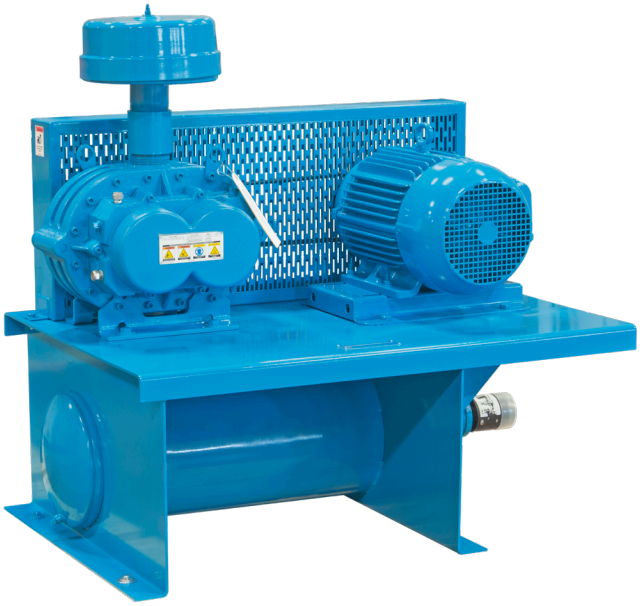

Quality Features
PneuPak rotary blower packages include the following quality features:
- CP Series rotary blower that includes features normally found only on premium design blowers such as:
  - Helical timing gears for quiet operation
  - Double row ball bearings on gear end of all models increases overall design bearing life by up to 50% versus other makes
  - Rotors with integrally cast shafts that allow larger shaft diameters and greater strength as compared to competition
  - Every CP Series blower is factory tested to assure of the highest quality. While other manufacturers only perform sample testing, M-D Pneumatics goes the distance to make sure that your blower meets our rigid ISO 9001 registered quality standards.

- TEFC motor standard with 1.15 service factor
- Welded steel motor slide base
- Matched V-belt drive with 1.4 service factor
- OSHA belt guard with flow-through ventilation keeps belts running cool
- Integral mounting base with discharge silencer
- Low pressure drop inlet filter
- Easy and convenient maintenance
- Suitable for indoor or outdoor installation
- Shipped completely assembled for convenient installation*

* Height consideration may require partial disassembly for shipment

M-D PNEUMATICS • 4840 W. KEARNEY ST., SPRINGFIELD, MO 65803 USA
P: 417-865-8715 OR 1-800-825-6937 • F: 417-865-2950
WWW.MDPNEUMATICS.COM

Dimensions

Values shown are approximate and should not be used for construction. Certified drawings are available through your local M-D Pneumatics Sales Professional.

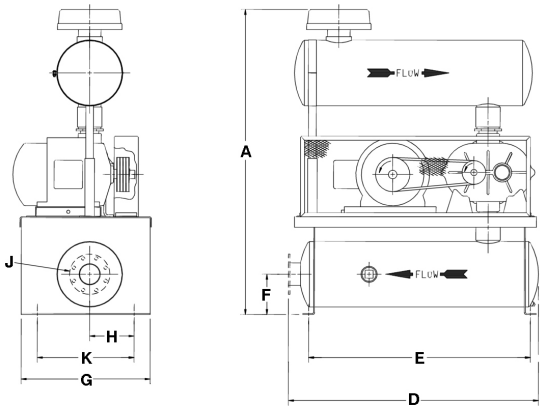

PneuPak "A" Package with
inlet filter/silencer, inlet silencer and discharge silencer

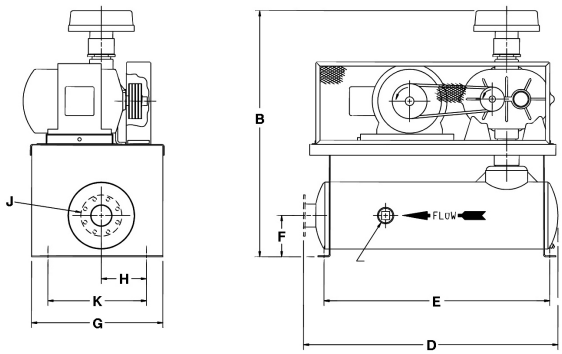

PneuPak "B" Package with
inlet filter/silencer and discharge silencer

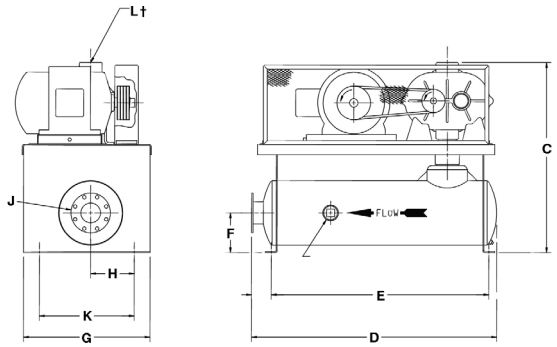

PneuPak "C" Package with discharge silencer

Dimension Table

All dimensions are shown in inches

PneuPak Size	A*	B*	C*	D	E	F	G	H	J	K
13-20	45.13	35	24.75	30	25	5	19	4.50	2" NPT	12
33-20	49.13	37	26.75							
13-25	49.44	37.63	27.75	31	25.50	6	26	6	2½"NPT	18
33-25	53.44	39.63	29.75							
13-30	55.69	43.94	32.19	49.50	44	7	27	7.50	3" NPT	18
33-30	61.38	48.19	36.19							
13-40	71.13	52.94	41.94	50.38	44	8	30.50	8.56	4" NPT	20.50
33-40	75.75	55.94	44.94							
13-50	75.69	56.69	44.94	62	55	10	32	11	5" FLG	24
33-50	81.19	59.69	47.94							
13-60	84.44	57.94	48	69	62	12	33	12.50	6" FLG	24
33-60	91.44	60.94	51							
13-80	101.50	69	51.88	89	65.75	15	42	12	8" FLG	24
33-80	116.25	81.75	64.63							

* "A", "B" and "C" height dimensions shown are "not to exceed" values. Actual height may be lower, depending on blower model incorporated in your package. Certified prints are available from your local M-D Pneumatics Sales Professional.

† "L" dimension is blower inlet connection size. Please refer to COMPETITOR PLUS specification sheet for applicable blower inlet connection size.

PneuPak Sizes Available for Each Blower

Blowers that can be mounted in each PneuPak are shown to the right of the applicable PneuPak.

PneuPak Size	Blower Model	PneuPak Size	Blower Model	PneuPak Size	Blower Model	PneuPak Size	Blower Model
13-20 33-20	2002 2004 3003 3006 4002	13-30 33-30	3006 4005 4007 5003 6005	13-50 33-50	5009 6005 6008 7006	13-80 33-80	7011 7018
13-25 33-25	3003 3006 4002 4005 5003	13-40 33-40	4007 5006 5009 6005 7006	13-60 33-60	6008 6015 7006 7011		

CONTACT US

For more information, contact your Regional Sales Manager or call us at:

1-800-825-6937

Your Local Sales Professional:

PNEU-VAC AIR, LLC
7637 Commerce Street, Corcoran MN 55340
customerservice@pneuvacair.com
763-762-4080
pneuvacair.com