M-D Pneumatics®

# PD Plus

*M-D Pneumatics® Positive Displacement Blowers*

# PD Plus Blowers

## Built to Perform Even in Severe Operating Conditions

The PD Plus positive displacement blower is the leading choice for Original Equipment Manufacturers (OEM's) in a wide range of industries. With multiple configuration options, the PD Plus can be built to suit even the most difficult industrial applications.

PD Plus offers premium, high-pressure industrial rotary blowers with heavy-duty models ranging from 3.25-12" gear diameters.

### TYPICAL APPLICATIONS

- PNEUMATIC CONVEYING
- SOLVENT & VAPOR RECOVERY
- SOIL VAPOR EXTRACTION
- GAS APPLICATIONS
- WASTEWATER TREATMENT
- CLOSED LOOP CONVEYING

PD PLUS 3200

PD PLUS 4000

PD PLUS 5500

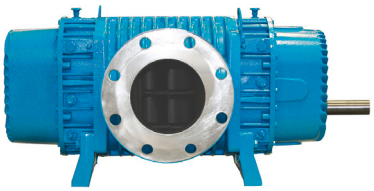

PD PLUS 7000

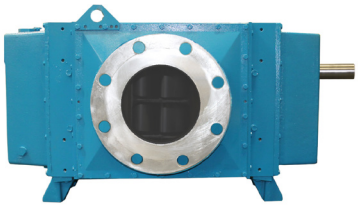

PD PLUS 9000

PD PLUS 1200

# M-D Pneumatics is your *Trusted Partner* in Industrial Applications

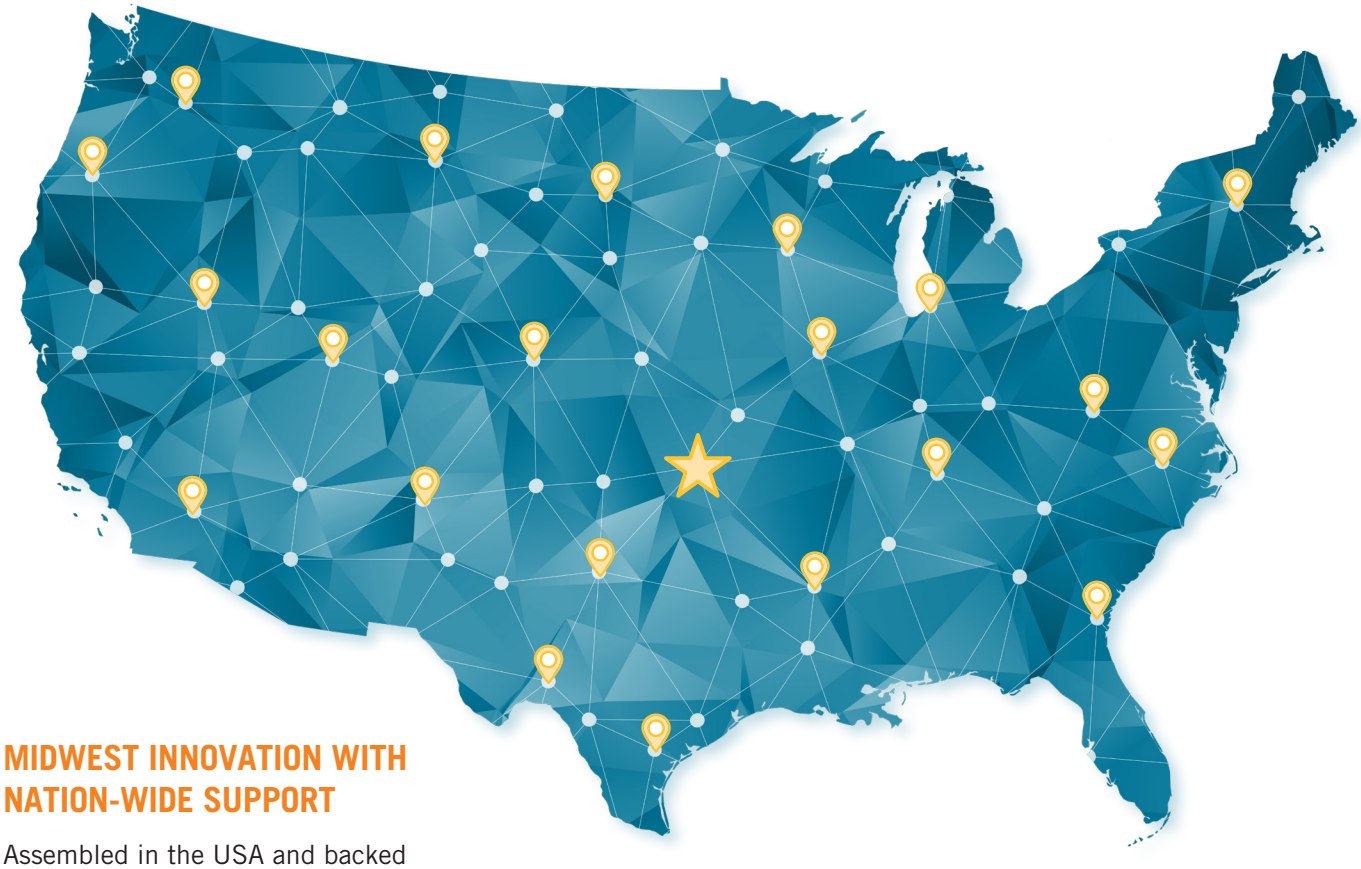

## MIDWEST INNOVATION WITH NATION-WIDE SUPPORT

Assembled in the USA and backed by a network of experienced sales and service professionals.

# Features & Benefits

**Reduced Loss of Balance:**
Rotors with straight-through cores to reduce the risk of loss of balance

**Improved Reliability:**
Precision machining on surfaces in contact with sealing members to reduce wear & decrease leakage risk

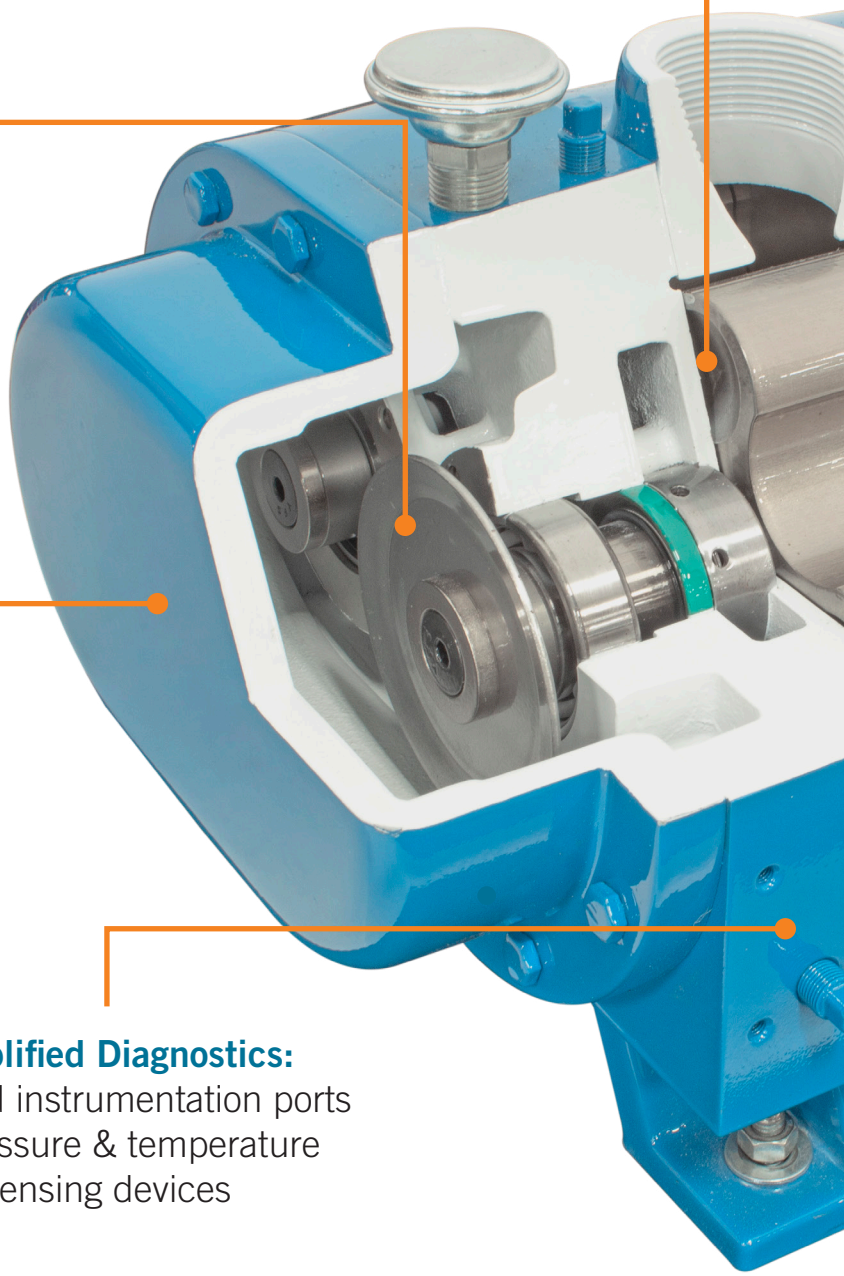

**Increased Blower Lifespan:**
Dual Splash Lubricated for longer blower life

**Simplified Diagnostics:**
Standard instrumentation ports for pressure & temperature sensing devices

## DETAILS AT A GLANCE

| | |
|---|---|
| **PRESSURE** | Up to 18 PSI |
| **VACUUM** | Up to 17 in Hg |
| **AIR FLOW** | Up to 9273 CFM |
| **WARRANTY** | **18 months** from first use or **24 months** from shipment |

**Increased Strength & Durability:**
Rotors with integrally cast shafts add robust resistance to mechanical stress

**Reduced Gear Wear:**
Precision timed helical gears reduce wear on gear teeth, extending operational lifespan

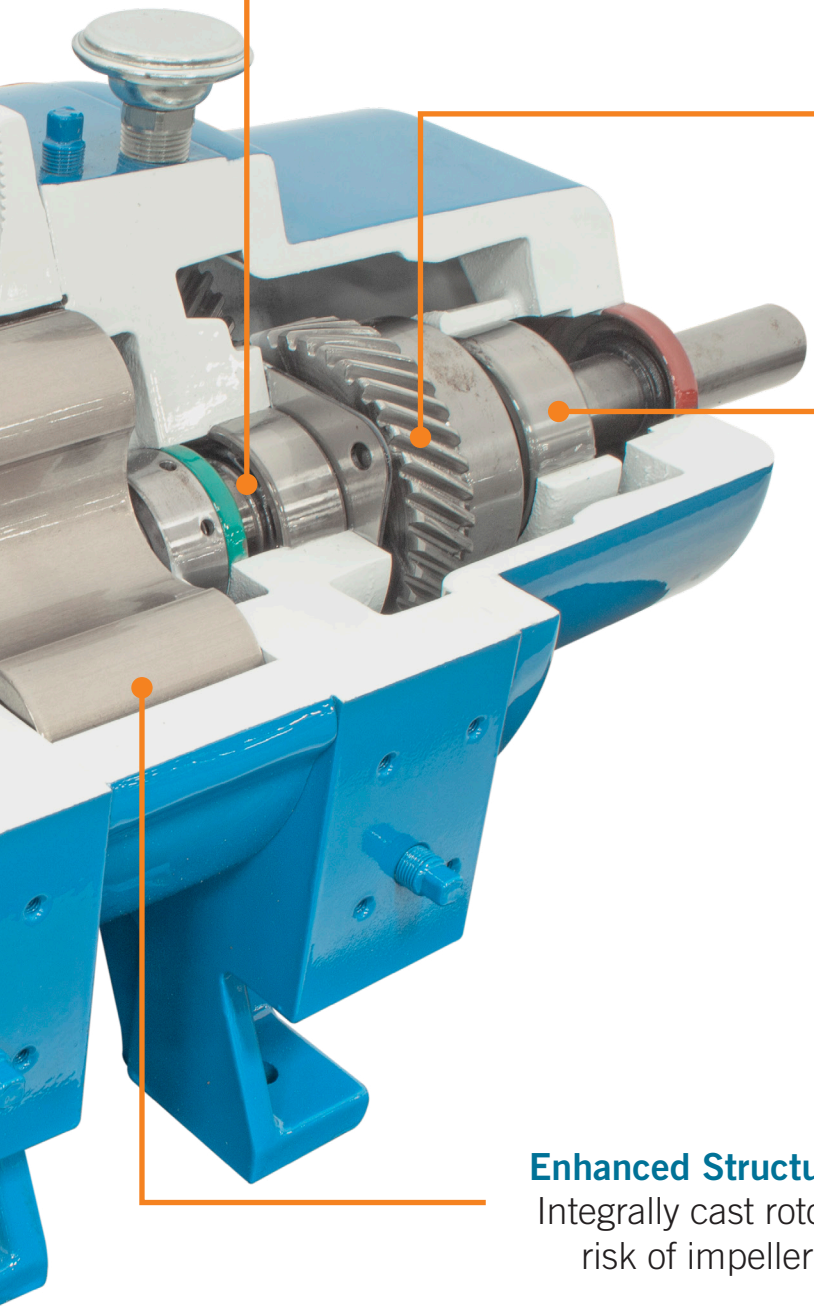

**Enhanced Load Performance:**
Outboard shaft bearing for increased overhung load capacity

**Enhanced Structural Integrity:**
Integrally cast rotors to reduce risk of impeller breakage

# It's All About Customization

# VERSATILE CASTING CHOICES

Different metals fulfill different requirements. Selecting the materials of construction best suited for your application reduces the potential for required maintenance and downtime.

**CAST IRON:** Standard casting material for our PD blowers. Carbon and silicon additives provide better vibration dampening when compared to ductile iron. With good wear resistance and ease of machinability, cast iron is the most affordable option.

**BI-PROTECT COATED CAST IRON:** Two-step coating process which layers electroless nickel and dense chrome to create a corrosion resistant surface. Economical option for those needing protection from corrosive environments.

**DUCTILE IRON:** Composed of iron with added magnesium content for both increased strength and ductility. Ductile iron offers improved corrosion resistance when compared to standard cast iron, and better shock absorption compared to steel.

Molten metal poured into casting mold.

**CAST STEEL:** Added carbon content changes the characteristic of the steel – resulting in stronger/harder composition. Ideal for applications where durability and strength of the blower are paramount, and corrosion resistance is not required. Cast steel is lighter than cast iron and the lowest cost of the steel forms.

**STAINLESS STEEL:** Increased chromium percentage results in resistance to corrosion/oxidization, especially in high-heat or oxygenated applications. With high tensile strength and low maintenance requirements, stainless steel can extend the overall life of the blower. For operations involving moisture, stainless steel is the preferred choice.

| Model | Bi-Protect Cast Iron | Ductile Iron | Cast Steel | Stainless Steel |
|---|---|---|---|---|
| 3202 | | ✔ | | |
| 3204 | ✔ | ✔ | | |
| 3206 | ✔ | ✔ | | ✔ |
| 3210 | ✔ | ✔ | ✔ | ✔ |
| 4009 | ✔ | ✔ | | ✔ |
| 4012 | ✔ | ✔ | | |
| 5507 | ✔ | ✔ | ✔ | ✔ |
| 5511 | ✔ | ✔ | | |
| 5514 | ✔ | ✔ | | ✔ |
| 5518 | ✔ | ✔ | | |
| 7010 | ✔ | ✔ | | |
| 7013 | ✔ | ✔ | ✔ | ✔ |
| 7017 | ✔ | ✔ | | ✔ |
| 7021 | ✔ | ✔ | | |
| 7026 | ✔ | ✔ | | |
| 9016 | ✔ | ✔ | | |
| 9020 | ✔ | ✔ | | |
| 9027 | ✔ | ✔ | | |
| 1215 | ✔ | ✔ | | |
| 1224 | ✔ | ✔ | ✔ | ✔ |
| 1230 | ✔ | ✔ | | |
| 1236 | ✔ | ✔ | | |
| 1248 | ✔ | ✔ | | |

# Designed to Handle
# YOUR TOUGHEST JOBS

Where others can't, the PD Plus can. For industrial processes involving flammable, corrosive, toxic or other harmful substances, M-D Pneumatics customized blowers provide safe, reliable operation. With a wide range of optional features, PD Plus can be configured to meet exact requirements.

- Option to remove yellow metal
- Multiple sealing configurations for leak resistant operation
- Ductile Iron, Bi-Protect coated Cast Iron, Cast Steel and Stainless Steel housing options available for corrosion resistance
- Shock Pulse Monitor mounting for Oxygen/Hydrogen service
- Additional performance testing for applications involving volatile gases
- Optional plugged rotors for processes utilizing moisture, abrasive or corrosive materials
- Cooling coils available on 3-7" models
- Integral lube system optional 7-9" and standard on 12" models

# Tailored to Perfection
# THE TRI-LOBE ADVANTAGE

## *Reduced Pulse = Lower Noise Levels*

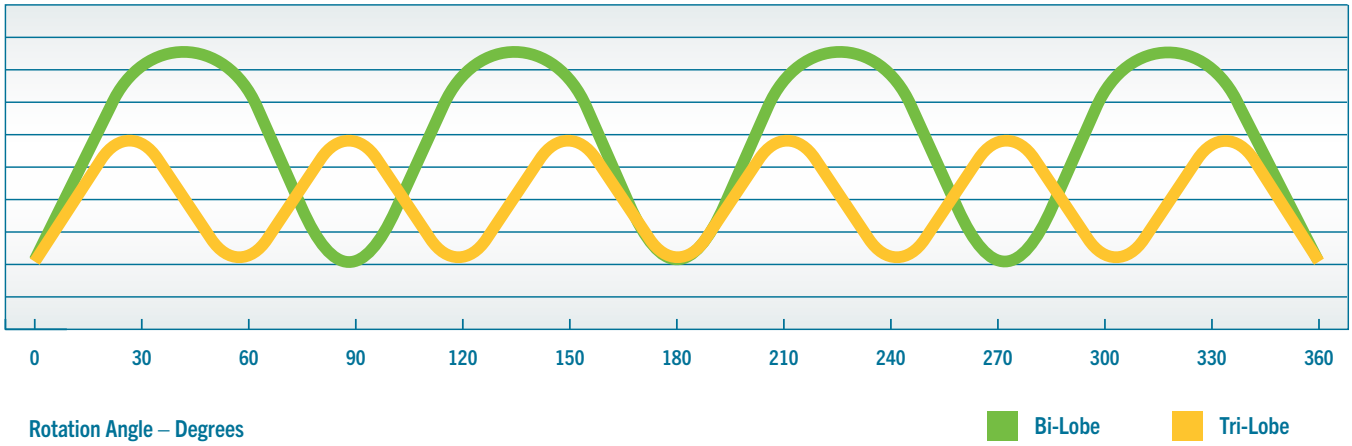


Reduced pulsations, smoother airflow, and the added benefit of lower noise levels. For installations where sound levels are a concern, the PD Plus with tri-lobe rotor profiles offers a solution. Tri-Lobe rotors available on select blower sizes.

# SELECTING THE PROPER SEAL

## CUSTOM SOLUTIONS FOR YOUR APPLICATION

Containing your process gas both extends the life of your blower and protects your environment from exposure to hazardous substances.

By creating gas tight seals, bearings and other critical components are isolated from potentially corrosive elements – reducing maintenance downtime and preserving production capacity. Mechanical seals offer an additional layer of protection in high-pressure applications as they can maintain sealing up to 100 PSI.

**SINGLE ENVELOPE GAS SERVICE:** Vent openings are tapped and plugged to prevent gas leakage. Fittings can also accept an inert gas purge for positive containment of process gas.

**DOUBLE ENVELOPE GAS SERVICE:** Built to laboratory standards where virtually complete sealing is required. In addition to the Single Envelope features series, the drive shaft is mechanically sealed and the oil sumps are plugged to provide an even higher degree of leakage protection.

| Seal Lube Identifier | Description | Envelope Type | When to Use This Seal |
|---|---|---|---|
| 1 | Integral mechanical seal / drive lip-splash – oil | Single | Generic gas or steam in process |
| 2 | Integral Mechanical seal / drive mechanical seal – oil | Double | Process includes hydrogen, oxygen, flammable or toxic gas, or sour gas |
| 3 | Lip / lab - oil | | Process uses air |
| 5 | Multi-lip / lip / oil | | Process uses air |
| 8 | Integral mechanical seal / drive shaft lip – integral lube | Single | Generic gas or steam in process |
| 9 | Integral mechanical seal / drive shaft mechanical seal - integral lube | Double | Process includes hydrogen, oxygen, flammable or toxic gas, or sour gas |

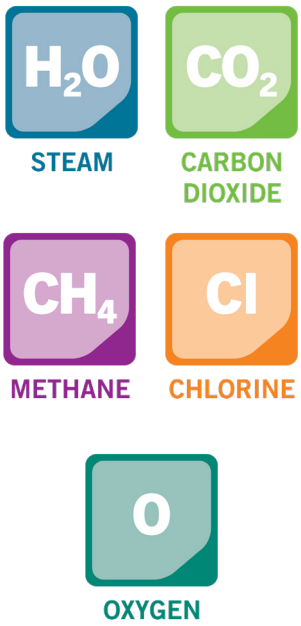


### PROTECT YOUR INVESTMENT WITH ADVANCED SEALING TECHNOLOGY

| Seal Type | Air Service | Inert Gas | Reactive Gas | Steam | Temp Range ° F |
|---|---|---|---|---|---|
| Viton Seal | ✔ | ✔ | | | -15° to 437° |
| Simriz Seal | | ✔ | ✔ | | 5° to 550° |
| Kalrez Seal | | ✔ | ✔ | ✔ | 5° to 550° |

The PD Plus offers a range of seals capable of operating in contact with volatile agents. Harsh chemicals can degrade sealing surfaces over time, selecting the correct elastomer will extend the seal life and reduce the chance of unwanted leaks.

# Liquid Process?
# PD PLUS CAN HANDLE IT

The PD Plus can be configured to handle steam processing as well as liquid injection for deeper vacuum.

Low-pressure steam exhaust from industrial operations can be mechanically compressed and moved to other areas of the factory for use rather than vented to atmosphere. Recompression is an efficient and cost effective way to streamline your industrial operations.

# Keep Your Blower Running Strong
# GENUINE AFTERMARKET PARTS

Genuine aftermarket parts are essential for maintaining the performance and reliability of industrial positive displacement blowers. Blowers play a critical role in industries where consistent airflow is necessary. Using high-quality, genuine M-D Pneumatics replacement parts—such as filters, seals, and bearings—ensures proper fit and function, reducing the risk of costly breakdowns and downtime.

Genuine aftermarket parts help maintain energy efficiency by reducing wear and preventing premature failures. In contrast, low-quality parts can cause friction, misalignment, or air leaks, leading to higher operational costs and system inefficiencies.

## Benefits of Genuine Aftermarket Parts:

- Ensures proper fit and optimal performance
- Reduces downtime and costly repairs
- Maintains energy efficiency and airflow
- Prevents premature wear and failures
- Extends the blower's service life

# Performance Tables

In conjunction with our program of continuous testing and design upgrading, all specifications are subject to change without notice. All data are approximate. Request a quotation for your specific application.

## Pressure (14.70 PSIA and 70° F Inlet)

| Model | Speed (RPM) | 2 PSIG | | 5 PSIG | | 8 PSIG | | 10 PSIG | | 12 PSIG | | 14 PSIG | | 15 PSIG | | Max. Vacuum | | |
|---|---|---|---|---|---|---|---|---|---|---|---|---|---|---|---|---|---|---|
| | | CFM | BHP | CFM | BHP | CFM | BHP | CFM | BHP | CFM | BHP | CFM | BHP | CFM | BHP | " Hg | CFM | BHP |
| 3202 | 1150 | 17 | 0.9 | 8 | 1.3 | - | - | - | - | - | - | - | - | - | - | 8 | 7 | 1.2 |
| | 1750 | 34 | 1.4 | 25 | 2.0 | 18 | 2.7 | - | - | - | - | - | - | - | - | 11 | 17 | 2.1 |
| | 2950 | 67 | 2.4 | 58 | 3.4 | 52 | 4.5 | 48 | 5.2 | 45 | 6.0 | - | - | - | - | 14 | 43 | 4.1 |
| | 3600 | 85 | 2.9 | 76 | 4.2 | 70 | 5.5 | 66 | 6.4 | 63 | 7.3 | 60 | 8.2 | 59 | 8.6 | 15 | 59 | 5.2 |
| 3204 | 1150 | 29 | 1.1 | 16 | 1.8 | - | - | - | - | - | - | - | - | - | - | 8 | 14 | 1.5 |
| | 1750 | 56 | 1.7 | 43 | 2.7 | 33 | 3.7 | - | - | - | - | - | - | - | - | 11 | 31 | 2.8 |
| | 2950 | 110 | 2.8 | 97 | 4.5 | 87 | 6.3 | 82 | 7.4 | 77 | 8.6 | 72 | 9.7 | - | - | 14 | 75 | 5.6 |
| | 3600 | 139 | 3.4 | 126 | 5.5 | 116 | 7.7 | 111 | 9.1 | 106 | 11 | 101 | 12 | 99 | 13 | 15 | 100 | 7.2 |
| 3206 | 1150 | 45 | 1.3 | 26 | 2.3 | - | - | - | - | - | - | - | - | - | - | 9 | 20 | 2.1 |
| | 1750 | 86 | 2.0 | 67 | 3.5 | 53 | 5.1 | 46 | 6.1 | - | - | - | - | - | - | 12 | 46 | 4.0 |
| | 2950 | 167 | 3.4 | 148 | 6.0 | 134 | 8.6 | 127 | 10 | 120 | 12 | 113 | 14 | - | - | 15 | 111 | 8.0 |
| | 3600 | 211 | 4.1 | 192 | 7.3 | 178 | 11 | 170 | 13 | 163 | 15 | 157 | 17 | 154 | 18 | 15 | 155 | 9.8 |
| 3210 | 1150 | 80 | 1.8 | 51 | 3.4 | - | - | - | - | - | - | - | - | - | - | 9 | 42 | 3.1 |
| | 1750 | 147 | 2.7 | 118 | 5.2 | 98 | 7.8 | 86 | 9.5 | - | - | - | - | - | - | 12 | 87 | 6.0 |
| | 2950 | 281 | 4.5 | 253 | 8.8 | 232 | 13 | 221 | 16 | 210 | 19 | 200 | 2 | 196 | 23 | 15 | 197 | 12 |
| | 3600 | 354 | 5.5 | 326 | 11 | 305 | 16 | 293 | 20 | 283 | 23 | 273 | 27 | 269 | 28 | 15 | 270 | 15 |

| Model | SPEED (RPM) | 2 PSIG | | 5 PSIG | | 8 PSIG | | 10 PSIG | | 12 PSIG | | 15 PSIG | | 18 PSIG | | Max. Vacuum | | |
|---|---|---|---|---|---|---|---|---|---|---|---|---|---|---|---|---|---|---|
| | | CFM | BHP | CFM | BHP | CFM | BHP | CFM | BHP | CFM | BHP | CFM | BHP | CFM | BHP | " Hg | CFM | BHP |
| 4009 | 1150 | 111 | 2.5 | 75 | 4.7 | 49 | 7 | - | - | - | - | - | - | - | - | 10 | 54 | 4.7 |
| | 1450 | 156 | 3.1 | 120 | 5.9 | 94 | 8.8 | 80 | 11 | - | - | - | - | - | - | 12 | 81 | 6.8 |
| | 1750 | 201 | 3.7 | 165 | 7.2 | 139 | 11 | 125 | 13 | 112 | 15 | - | - | - | - | 14 | 106 | 9.3 |
| | 2950 | 381 | 6.3 | 345 | 12 | 319 | 18 | 305 | 22 | 292 | 26 | 274 | 31 | 258 | 37 | 16 | 264 | 18 |
| | 3600 | 478 | 7.7 | 443 | 15 | 417 | 22 | 402 | 27 | 389 | 32 | 372 | 38 | 355 | 45 | 17 | 349 | 23 |
| 4012 | 1150 | 155 | 3 | 111 | 6 | 80 | 9 | - | - | - | | - | - | - | - | 8 | 107 | 5 |
| | 1450 | 215 | 4 | 171 | 8 | 140 | 11 | 122 | 14 | - | | - | - | - | - | 11 | 135 | 8 |
| | 1750 | 275 | 5 | 231 | 9 | 200 | 14 | 182 | 17 | 166 | 20 | - | - | - | - | 12 | 184 | 11 |
| | 2950 | 515 | 8 | 471 | 15 | 440 | 23 | 422 | 28 | 406 | 33 | 385 | 41 | - | - | 13 | 412 | 19 |
| | 3600 | 645 | 9 | 601 | 19 | 570 | 28 | 552 | 34 | 536 | 41 | 515 | 50 | - | - | 15 | 516 | 26 |

| Model | SPEED (RPM) | 5 PSIG | | 8 PSIG | | 10 PSIG | | 12 PSIG | | 13 PSIG | | 15 PSIG | | 17 PSIG | | 18 PSIG | | Max. Vacuum | | |
|---|---|---|---|---|---|---|---|---|---|---|---|---|---|---|---|---|---|---|---|---|
| | | CFM | BHP | CFM | BHP | CFM | BHP | CFM | BHP | CFM | BHP | CFM | BHP | CFM | BHP | CFM | BHP | " Hg | CFM | BHP |
| 5507 | 1150 | 155 | 7.2 | 124 | 11 | 107 | 13 | 91 | 15 | - | - | - | - | - | - | - | - | 13 | 97 | 8.8 |
| | 1750 | 296 | 11 | 265 | 16 | 248 | 20 | 232 | 24 | 225 | 25 | 211 | 29 | - | - | - | - | 15 | 213 | 15 |
| | 3600 | 730 | 22 | 700 | 34 | 683 | 41 | 667 | 48 | 660 | 52 | 646 | 59 | 633 | 67 | 627 | 70 | 17 | 619 | 35 |
| 5511 | 1150 | 239 | 9.9 | 197 | 15 | 173 | 19 | 152 | 22 | - | - | - | | - | - | - | - | 13 | 159 | 12 |
| | 1750 | 446 | 15 | 404 | 23 | 380 | 28 | 359 | 34 | 349 | 36 | 330 | 41 | - | - | - | - | 15 | 332 | 21 |
| | 3600 | 1084 | 31 | 1042 | 47 | 1018 | 58 | 997 | 69 | 987 | 74 | 968 | 85 | 950 | 96 | - | - | 17 | 931 | 49 |
| 5514 | 1150 | 309 | 12 | 257 | 19 | 228 | 23 | 234 | 28 | | | - | - | - | - | - | - | 13 | 210 | 15 |
| | 1750 | 573 | 19 | 521 | 29 | 492 | 36 | 465 | 42 | 453 | 46 | - | - | - | - | - | - | 15 | 432 | 27 |
| | 3600 | 1387 | 39 | 1335 | 59 | 1306 | 73 | 1279 | 87 | 1267 | 94 | - | - | - | - | - | - | 15 | 1246 | 55 |
| 5518 | 1150 | 410 | 15 | 346 | 24 | 310 | 30 | - | - | - | - | - | - | - | - | - | - | 13 | 289 | |
| | 1750 | 749 | 24 | 685 | 36 | 649 | 45 | - | - | - | - | - | - | - | - | - | - | 15 | 576 | 38 |
| | 3600 | 1794 | 48 | 1730 | 75 | 1695 | 93 | - | - | - | - | - | - | - | - | - | - | 15 | 1621 | 69 |

| Model | SPEED (RPM) | 2 PSIG | | 5 PSIG | | 8 PSIG | | 10 PSIG | | 12 PSIG | | 15 PSIG | | 18 PSIG | | Max. Vacuum | | |
|---|---|---|---|---|---|---|---|---|---|---|---|---|---|---|---|---|---|---|
| | | CFM | BHP | CFM | BHP | CFM | BHP | CFM | BHP | CFM | BHP | CFM | BHP | CFM | BHP | " Hg | CFM | BHP |
| 7010 | 1200 | 586 | 8.5 | 513 | 18 | 460 | 27 | 430 | 33 | 403 | 40 | 367 | 49 | - | - | 15 | 370 | 25 |
| | 1750 | 912 | 13 | 839 | 26 | 786 | 40 | 756 | 49 | 730 | 58 | 693 | 71 | 660 | 85 | 16 | 672 | 39 |
| | 2400 | 1297 | 17 | 1224 | 36 | 1172 | 54 | 1142 | 67 | 1115 | 79 | 1079 | 98 | 1046 | 116 | 17 | 1032 | 57 |
| | 3000 | 1653 | 21 | 1580 | 45 | 1527 | 68 | 1498 | 83 | 1471 | 99 | 1434 | 122 | 1402 | 145 | 17 | 1388 | 71 |
| 7013 | 1200 | 749 | 10 | 660 | 22 | 596 | 34 | 560 | 42 | 527 | 50 | 483 | 61 | - | - | 15 | 486 | 31 |
| | 1750 | 1163 | 15 | 1074 | 32 | 1010 | 49 | 974 | 61 | 941 | 72 | 897 | 89 | 857 | 107 | 16 | 871 | 49 |
| | 2400 | 1652 | 20 | 1563 | 44 | 1499 | 68 | 1462 | 83 | 1430 | 99 | 1385 | 123 | 1345 | 146 | 17 | 1329 | 70 |
| | 3000 | 2103 | 26 | 2014 | 55 | 1950 | 85 | 1914 | 104 | 1881 | 124 | 1837 | 153 | 1797 | 183 | 17 | 1780 | 88 |
| 7017 | 1200 | 985 | 13 | 872 | 28 | 790 | 44 | 744 | 54 | 703 | 64 | 647 | 79 | - | - | 15 | 651 | 40 |
| | 1750 | 1526 | 18 | 1413 | 41 | 1331 | 63 | 1285 | 78 | 1244 | 93 | 1187 | 116 | - | - | 16 | 1155 | 62 |
| | 2400 | 2165 | 25 | 2051 | 56 | 1970 | 87 | 1924 | 108 | 1882 | 128 | 1826 | 159 | - | - | 17 | 1754 | 91 |
| | 3000 | 2754 | 32 | 2641 | 70 | 2560 | 109 | 2514 | 134 | 2472 | 160 | 2416 | 199 | - | - | 17 | 2344 | 113 |
| 7021 | 1200 | 1225 | 15 | 1090 | 34 | 993 | 53 | 939 | 66 | 889 | 79 | 822 | 98 | - | - | 15 | 827 | 49 |
| | 1750 | 1893 | 22 | 1758 | 50 | 1661 | 78 | 1606 | 96 | 1557 | 115 | 1490 | 142 | - | - | 15 | 1495 | 72 |
| | 2400 | 2682 | 30 | 2547 | 68 | 2450 | 106 | 2395 | 132 | 2346 | 157 | 2279 | 195 | - | - | 15 | 2284 | 98 |
| | 3000 | 3410 | 38 | 3276 | 85 | 3178 | 133 | 3124 | 165 | 3074 | 196 | 3007 | 244 | - | - | 15 | 3012 | 123 |
| 7026 | 1200 | 1527 | 18 | 1367 | 42 | 1251 | 65 | 1186 | 81 | 1127 | 97 | - | - | - | - | 14 | 1101 | 56 |
| | 1750 | 2354 | 26 | 2193 | 61 | 2078 | 95 | 2012 | 118 | 1953 | 141 | - | - | - | - | 15 | 1879 | 88 |
| | 2400 | 3331 | 36 | 3170 | 83 | 3055 | 131 | 2989 | 162 | 2930 | 193 | - | - | - | - | 15 | 2856 | 121 |
| | 3000 | 4233 | 45 | 4072 | 104 | 3956 | 163 | 3891 | 202 | 3832 | 242 | - | - | - | - | 15 | 3758 | 151 |

| Model | SPEED (RPM) | 2 PSIG | | 5 PSIG | | 8 PSIG | | 10 PSIG | | 12 PSIG | | 14 PSIG | | 15 PSIG | | Max. Vacuum | | |
|---|---|---|---|---|---|---|---|---|---|---|---|---|---|---|---|---|---|---|
| | | CFM | BHP | CFM | BHP | CFM | BHP | CFM | BHP | CFM | BHP | CFM | BHP | CFM | BHP | " Hg | CFM | BHP |
| 9016 | 600 | 497 | 19 | 419 | 30 | 375 | 37 | - | - | - | - | - | - | - | - | 13 | 349 | 24 |
| | 1150 | 1224 | 37 | 1146 | 57 | 1101 | 70 | 1062 | 83 | 1043 | 90 | 1025 | 97 | 1008 | 103 | 15 | 1011 | 53 |
| | 1450 | 1620 | 47 | 1542 | 72 | 1498 | 88 | 1458 | 105 | 1439 | 113 | 1421 | 122 | 1404 | 130 | 15 | 1408 | 66 |
| | 1750 | 2016 | 56 | 1938 | 86 | 1894 | 107 | 1854 | 127 | 1835 | 137 | 1817 | 147 | 1800 | 157 | 15 | 1804 | 80 |
| | 2400 | 2875 | 77 | 2797 | 119 | 2753 | 146 | 2713 | 174 | 2694 | 188 | 2676 | 202 | 2659 | 215 | 15 | 2663 | 110 |
| 9020 | 600 | 652 | 25 | 550 | 38 | 492 | 47 | - | - | - | - | - | - | - | - | 13 | 458 | 31 |
| | 1150 | 1605 | 47 | 1503 | 73 | 1445 | 91 | 1393 | 108 | 1368 | 117 | 1345 | 125 | 1322 | 134 | 15 | 1327 | 68 |
| | 1450 | 2125 | 60 | 2023 | 92 | 1965 | 114 | 1913 | 136 | 1888 | 147 | 1864 | 158 | 1842 | 169 | 15 | 1847 | 86 |
| | 1750 | 2645 | 72 | 2543 | 112 | 2485 | 138 | 2432 | 165 | 2408 | 178 | 2384 | 191 | 2362 | 204 | 15 | 2367 | 103 |
| | 2400 | 3772 | 99 | 3669 | 153 | 3611 | 189 | 3559 | 226 | 3534 | 244 | 3511 | 262 | 3488 | 280 | 15 | 3493 | 142 |
| 9027 | 600 | 870 | 32 | 733 | 50 | 656 | 62 | - | - | - | - | - | - | - | - | 13 | 610 | 41 |
| | 1150 | 2141 | 62 | 2004 | 97 | 1927 | 120 | 1857 | 143 | 1824 | 154 | 1793 | 166 | 1763 | 178 | 15 | 1769 | 89 |
| | 1450 | 2834 | 78 | 2697 | 122 | 2620 | 151 | 2550 | 180 | 2518 | 195 | 2486 | 209 | 2456 | 224 | 15 | 2463 | 112 |
| | 1750 | 3527 | 94 | 3391 | 147 | 3313 | 182 | 3244 | 217 | 3211 | 235 | 3180 | 253 | 3149 | 270 | 15 | 3156 | 136 |
| | 2400 | 5030 | 129 | 4893 | 201 | 4816 | 250 | 4746 | 298 | 4713 | 322 | 4682 | 347 | 4651 | 371 | 15 | 4658 | 186 |

| Model | SPEED (RPM) | 2 PSIG | | 6 PSIG | | 9 PSIG | | 10 PSIG | | 12 PSIG | | 14 PSIG | | 15 PSIG | | Max. Vacuum | | |
|---|---|---|---|---|---|---|---|---|---|---|---|---|---|---|---|---|---|---|
| | | CFM | BHP | CFM | BHP | CFM | BHP | CFM | BHP | CFM | BHP | CFM | BHP | CFM | BHP | In. Hg | CFM | BHP |
| 1215 | 600 | 1025 | 15 | 806 | 38 | 689 | 56 | 655 | 61 | - | - | - | - | - | - | 12 | 661 | 38 |
| | 1200 | 2351 | 30 | 2131 | 77 | 2015 | 111 | 1980 | 123 | 1916 | 146 | 1857 | 169 | 1829 | 181 | 15 | 1836 | 93 |
| | 1800 | 3676 | 46 | 3457 | 115 | 3340 | 167 | 3306 | 184 | 3242 | 219 | 3183 | 254 | 3155 | 271 | 15 | 3161 | 139 |
| 1224 | 600 | 1661 | 22 | 1324 | 59 | 1145 | 87 | 1092 | 96 | - | - | - | - | - | - | 13 | 1027 | 63 |
| | 1200 | 3781 | 44 | 3444 | 118 | 3265 | 174 | 3213 | 192 | 3115 | 229 | 3024 | 266 | 2982 | 285 | 15 | 2991 | 144 |
| | 1800 | 5901 | 66 | 5565 | 177 | 5385 | 261 | 5333 | 288 | 5235 | 344 | 5145 | 399 | 5102 | 427 | 15 | 5111 | 215 |
| 1230 | 600 | 2076 | 27 | 1655 | 73 | 1431 | 108 | 1365 | 119 | - | - | - | - | - | - | 13 | 1284 | 78 |
| | 1200 | 4727 | 54 | 4306 | 146 | 4082 | 215 | 4016 | 238 | 3894 | 285 | 3781 | 331 | 3727 | 354 | 15 | 3739 | 178 |
| | 1800 | 7378 | 80 | 6957 | 219 | 6733 | 323 | 6667 | 358 | 6544 | 427 | 6432 | 496 | - | - | 15 | 6390 | 267 |
| 1236 | 600 | 2506 | 31 | 2012 | 87 | 1749 | 129 | - | - | - | - | - | - | - | - | 12 | 1685 | 85 |
| | 1200 | 5686 | 63 | 5193 | 174 | 4930 | 257 | - | - | - | - | - | - | - | - | 12 | 4866 | 171 |
| | 1800 | 8867 | 94 | 8373 | 261 | 8111 | 385 | - | - | - | - | - | - | - | - | 12 | 8046 | 256 |
| 1248 | 600 | 3361 | 41 | 2717 | 115 | - | - | - | - | - | - | - | - | - | - | 10 | 2552 | 94 |
| | 1200 | 7602 | 81 | 6958 | 229 | - | - | - | - | - | - | - | - | - | - | 10 | 4524 | 189 |
| | 1400 | 9016 | 95 | 8372 | 267 | - | - | - | - | - | - | - | - | - | - | 10 | 8206 | 220 |

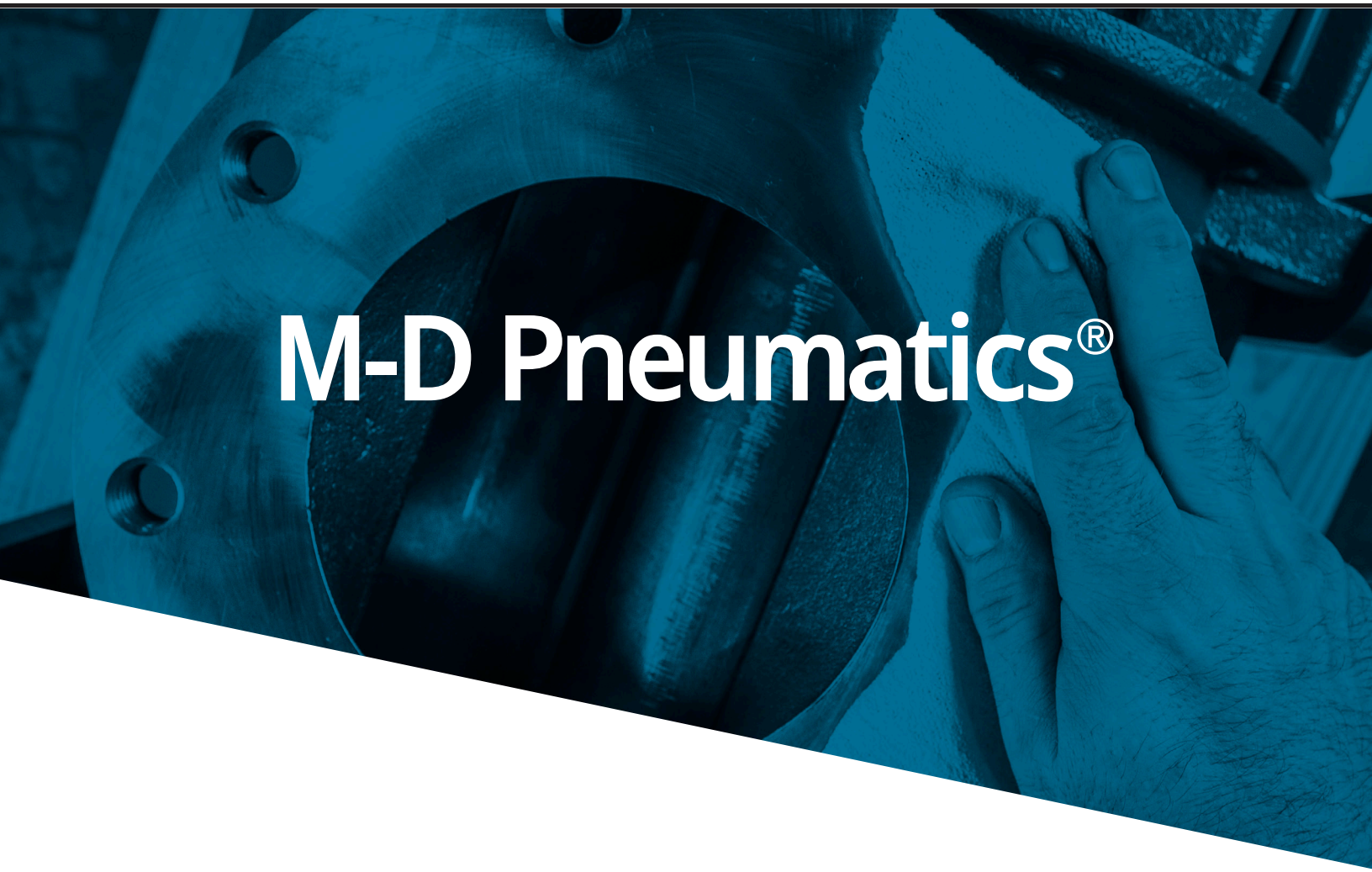

# M-D Pneumatics®

## LOCAL CONTACT:

**PNEU-VAC AIR, LLC**
7637 Commerce Street, Corcoran MN 55340
customerservice@pneuvacair.com
763-762-4080
pneuvacair.com

**www.md-kinney.com**

©2025 Industrial Technologies and Services, LLC. Printed in U.S.A.

MD-PD-PLUS 2nd Ed. 10/25